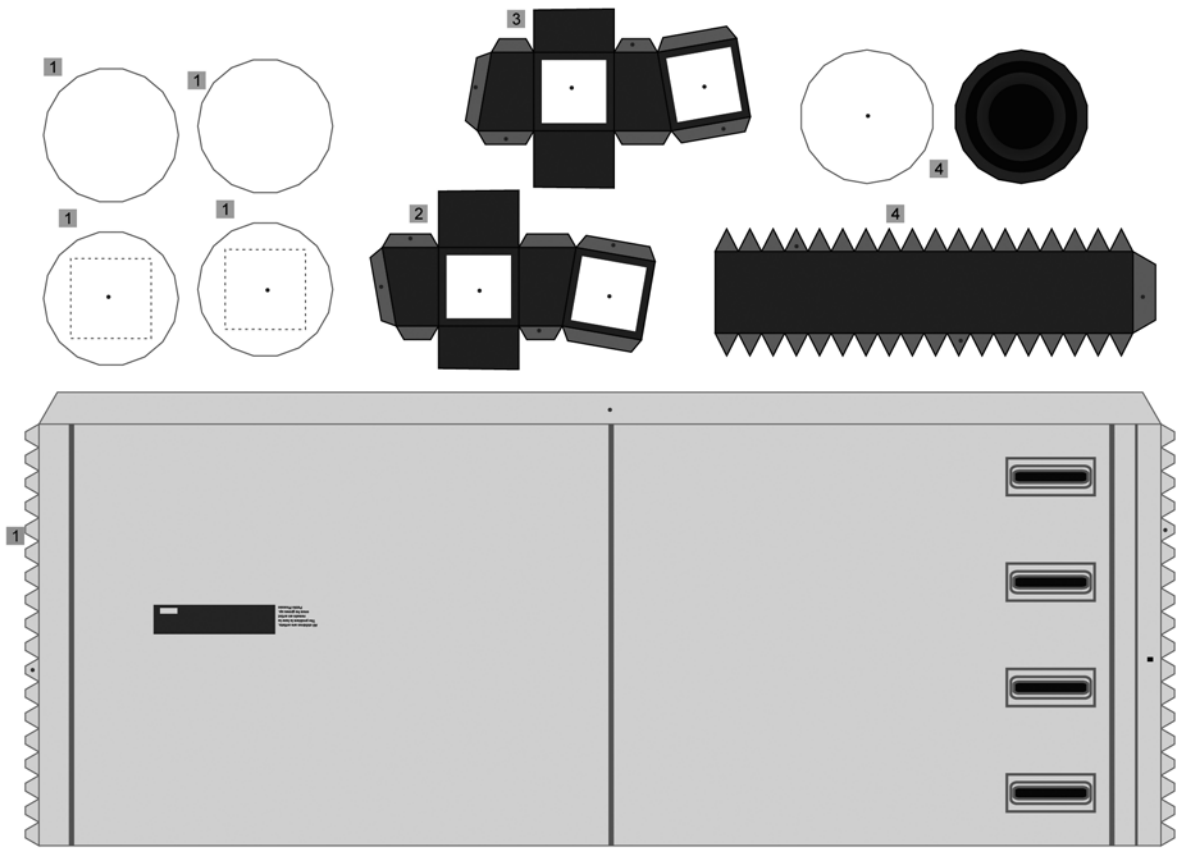
1
1
1
1
3
2
4
4
1

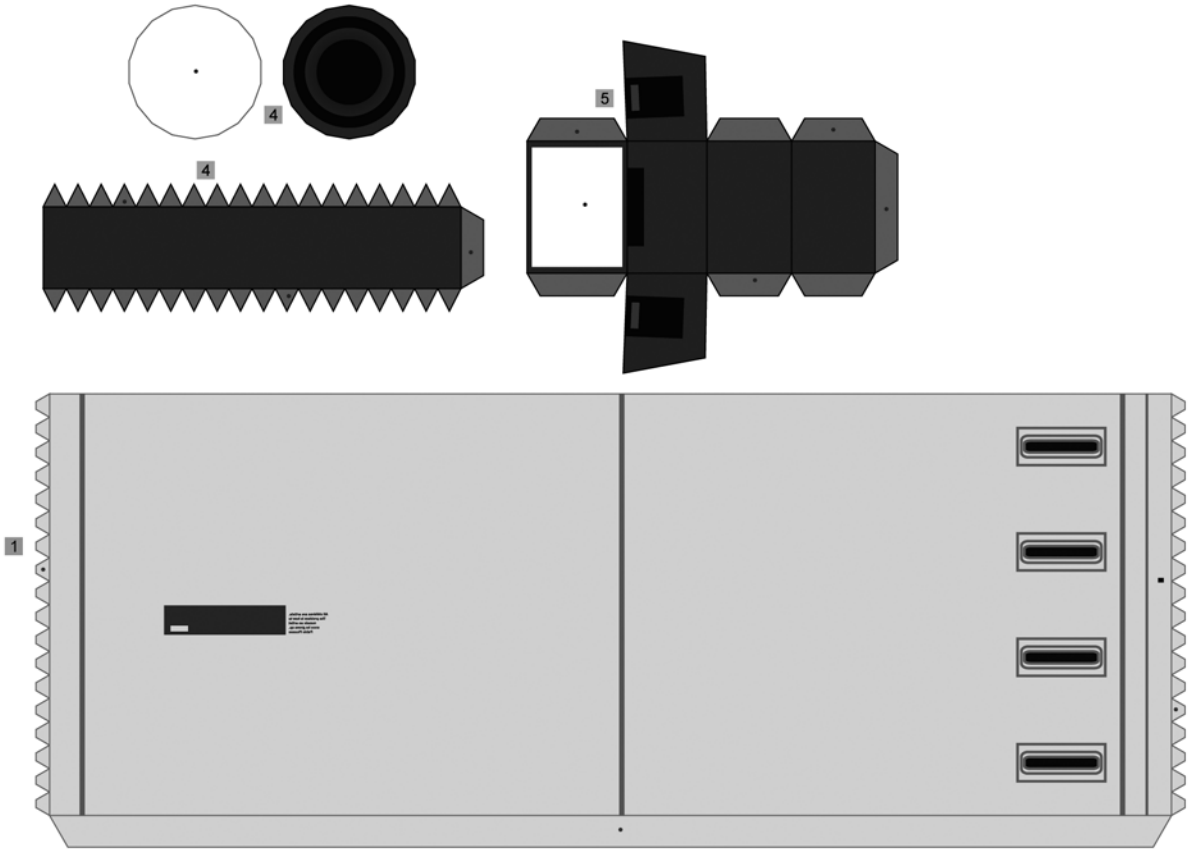
4
4
5
1

8
9
facing the back of ananju
6

11
12
13
7

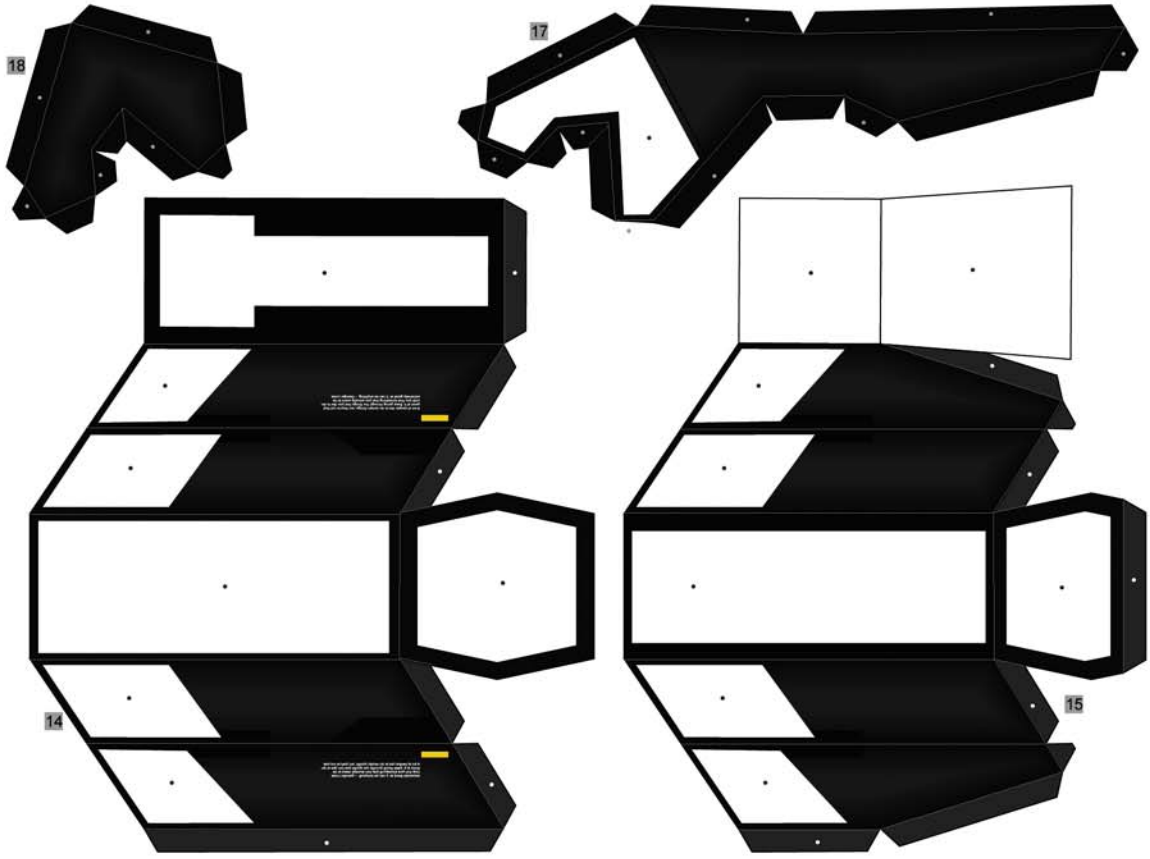
18
17
14
15

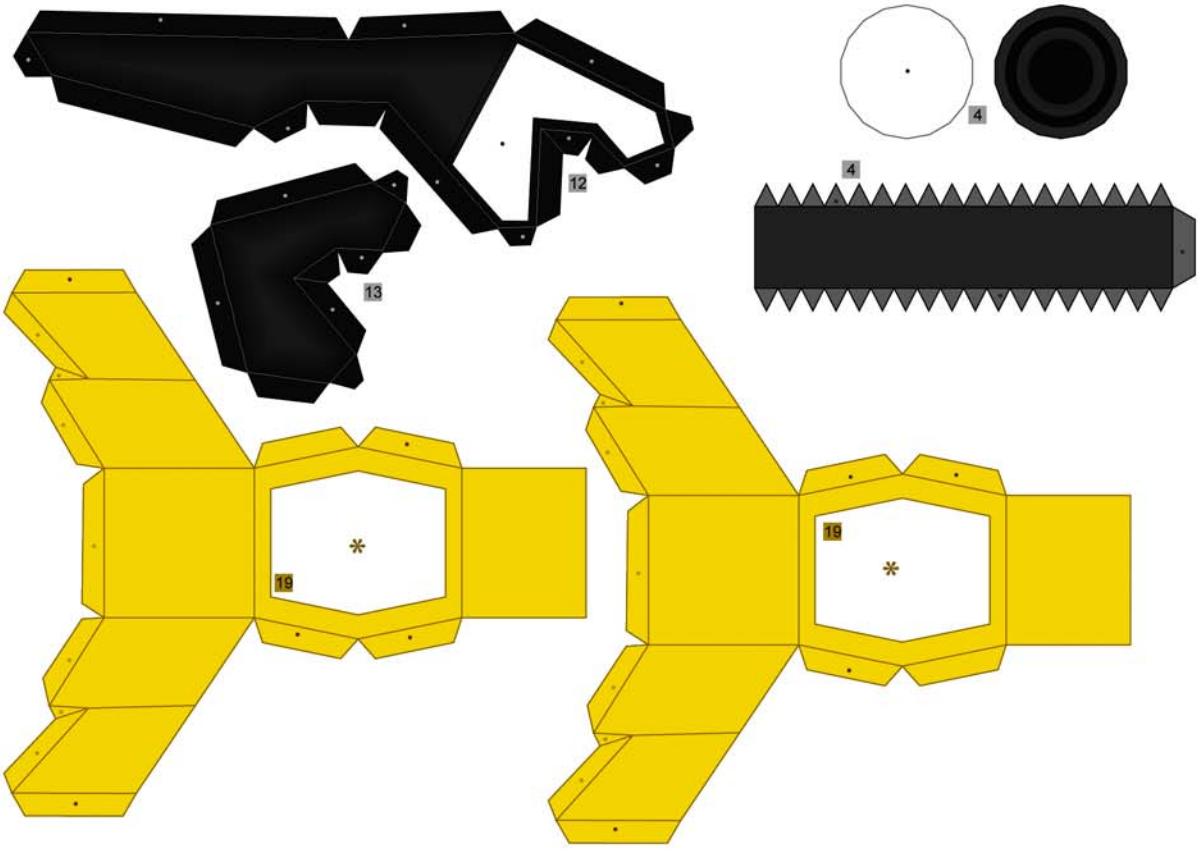
12
13
4
4
19
19

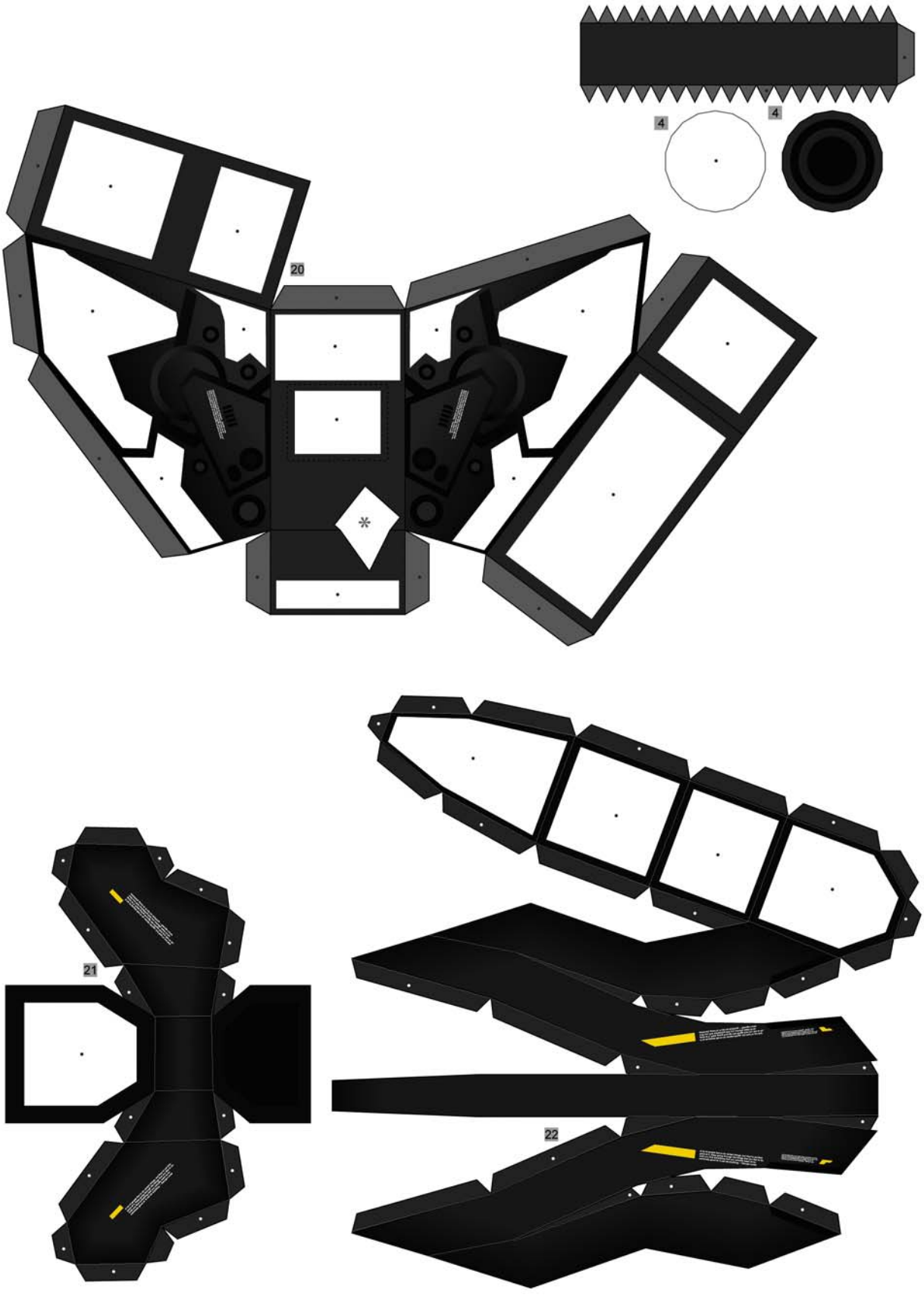
4
4
20
21
22

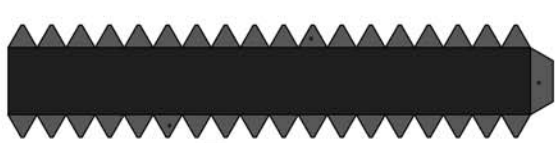
24
24


24

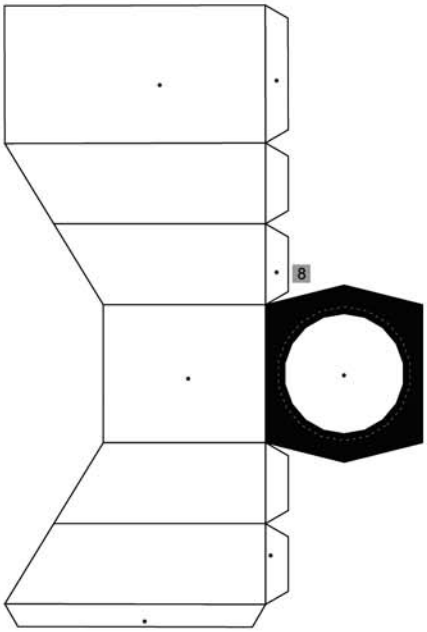
8

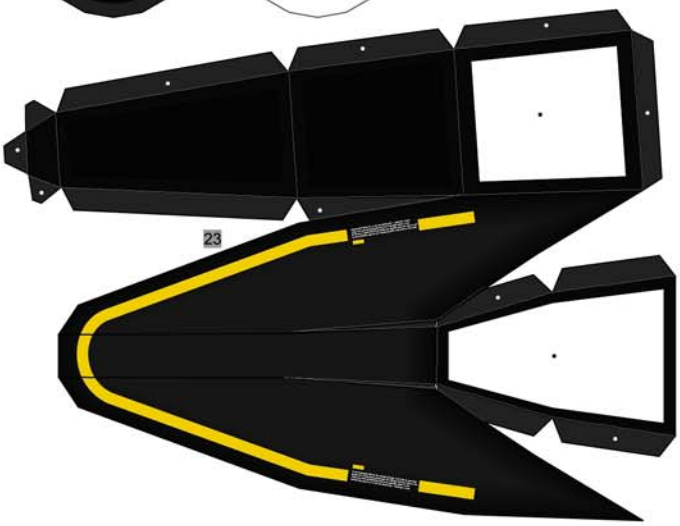
23

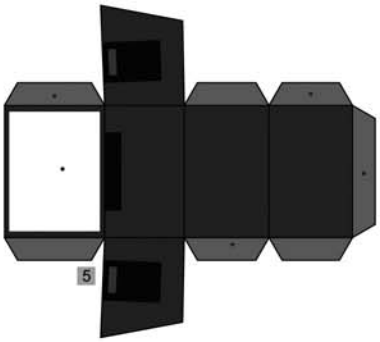
5

25

24

24

24

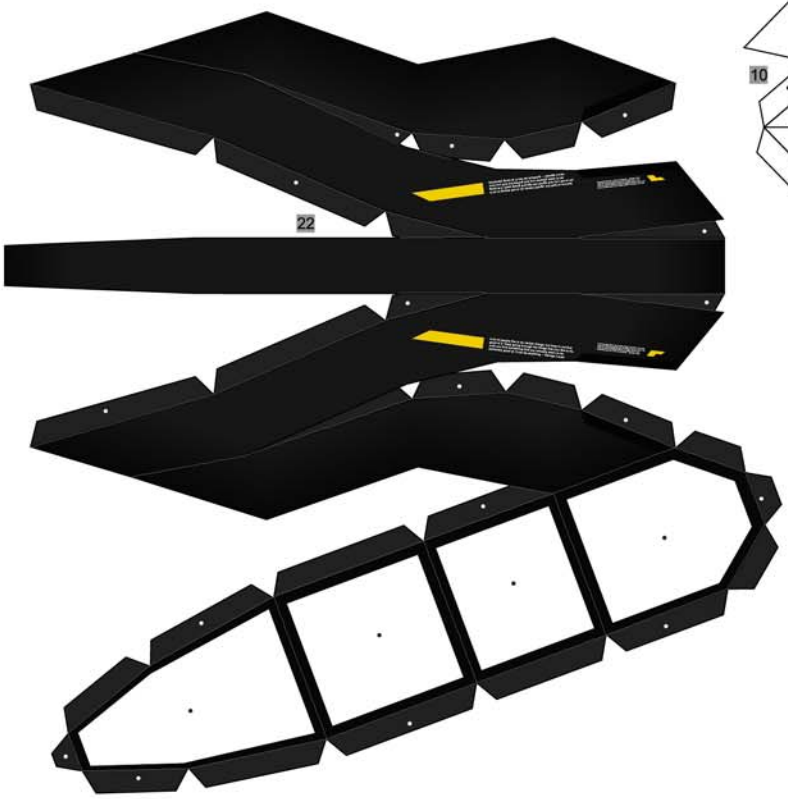
22

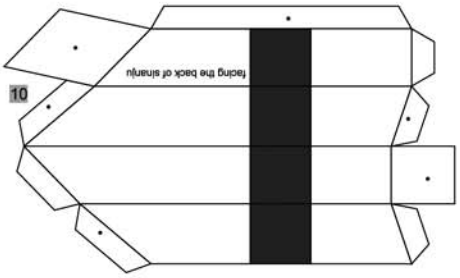
10
facing the back of shanqiu

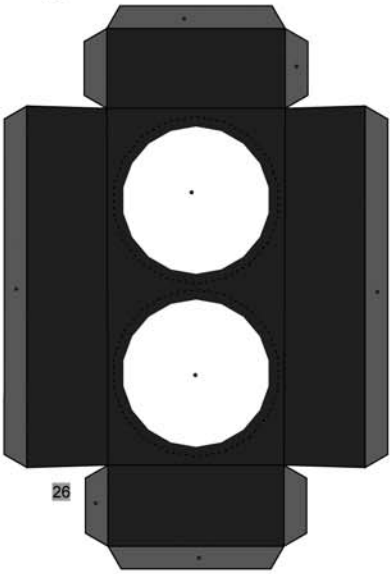
26


28
28


29

18

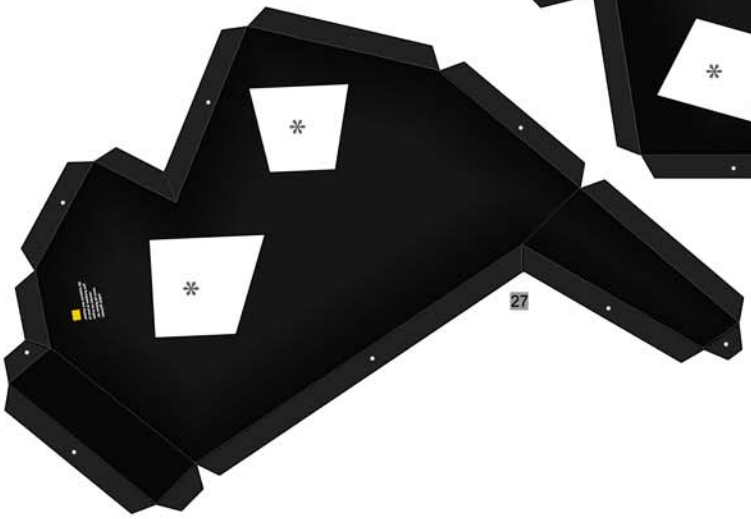
27

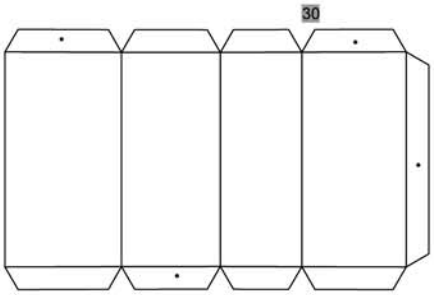
30

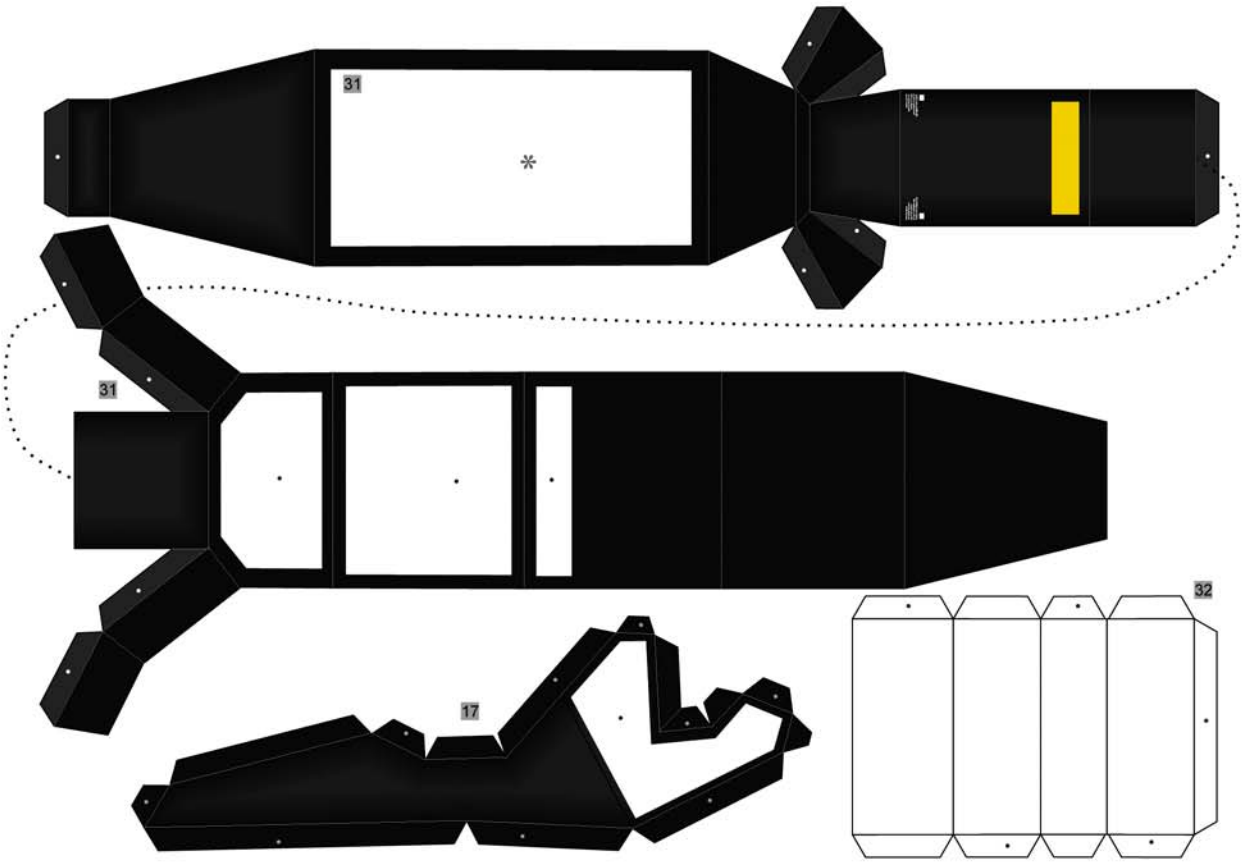
31
31
32
17

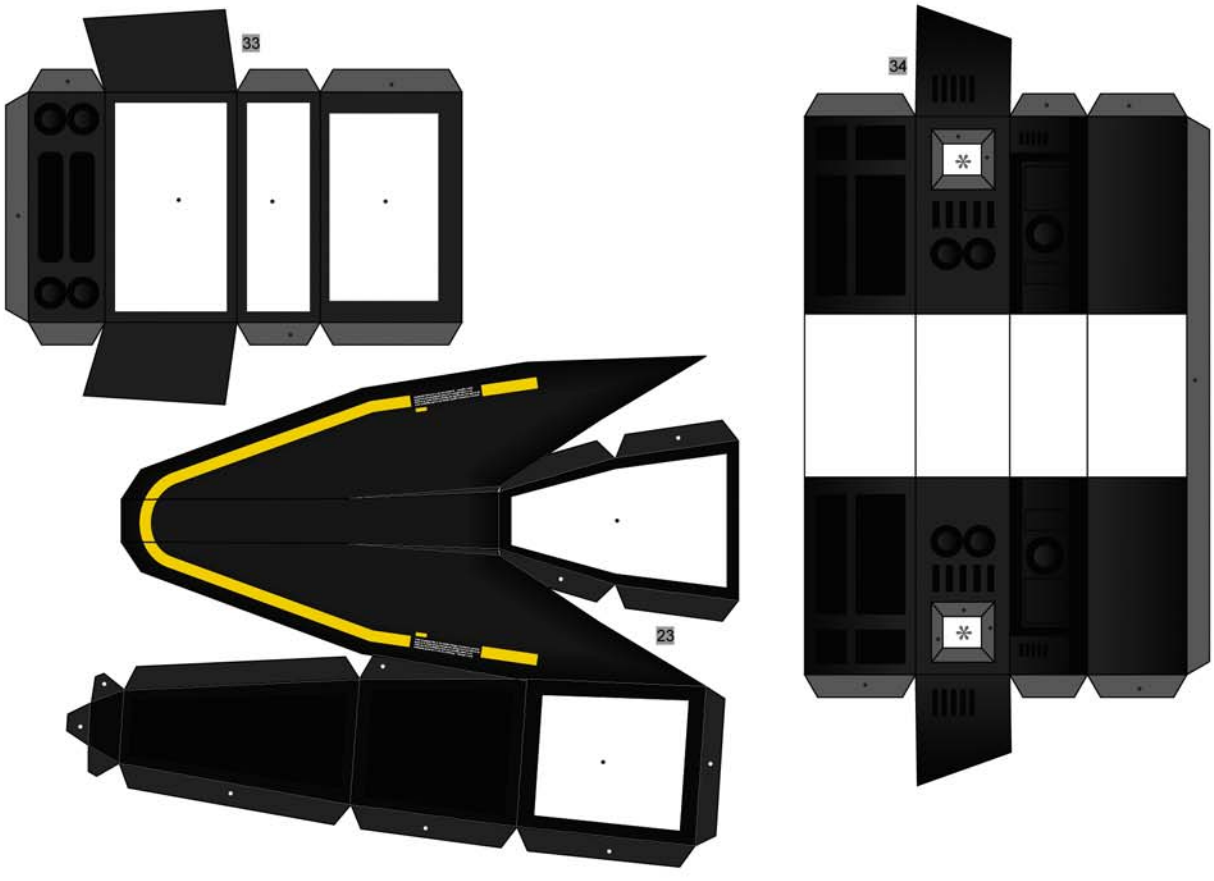
33
34
23

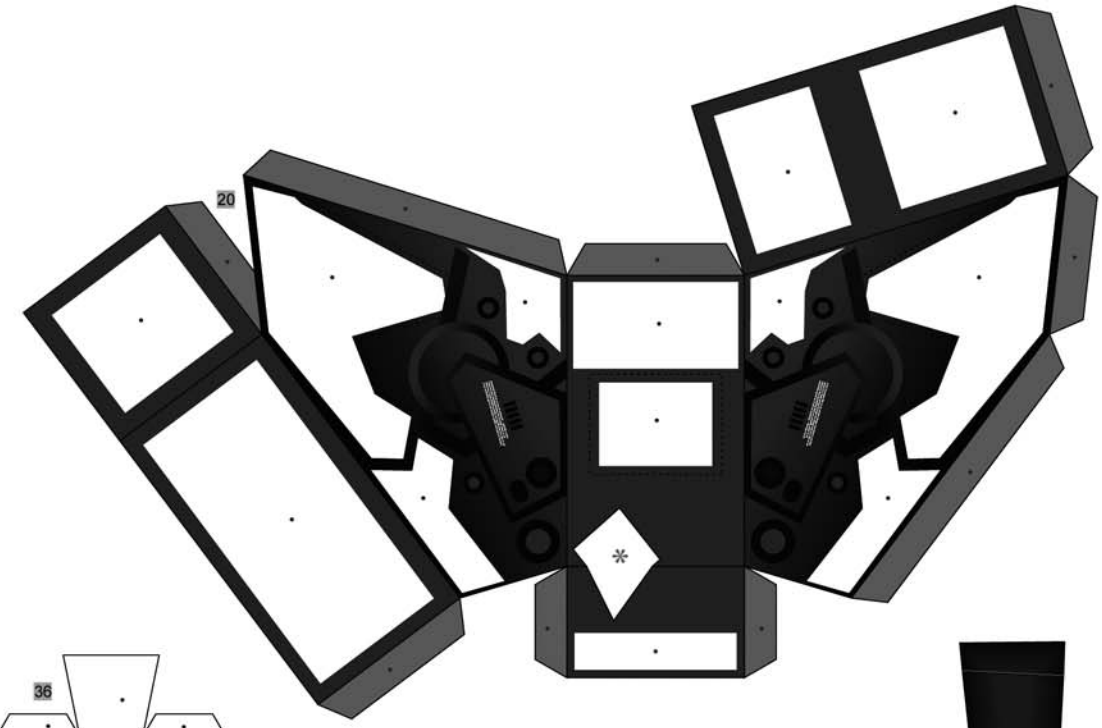
20

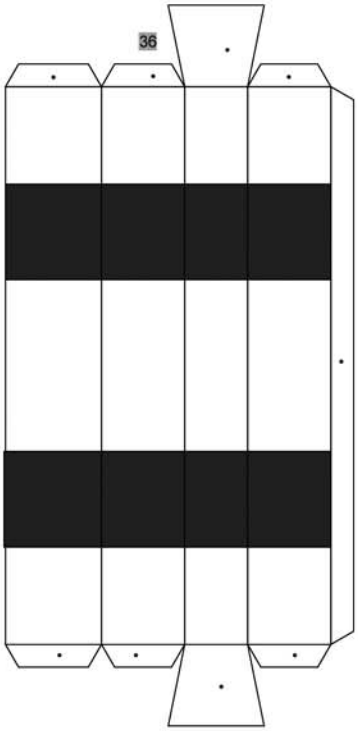
36


35

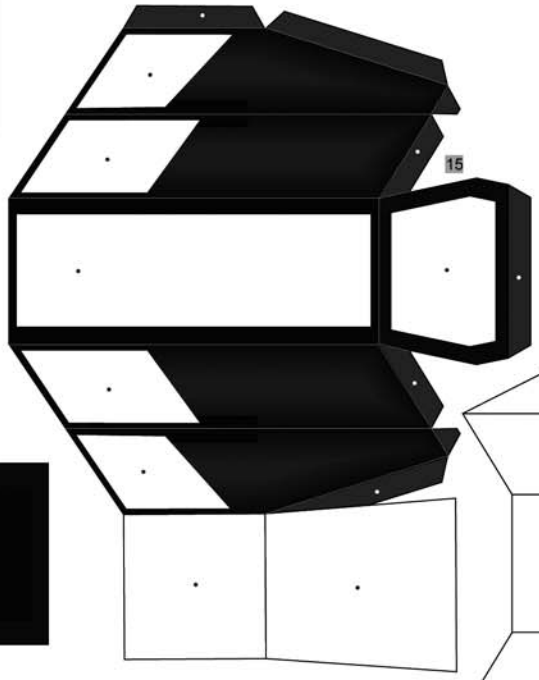
15

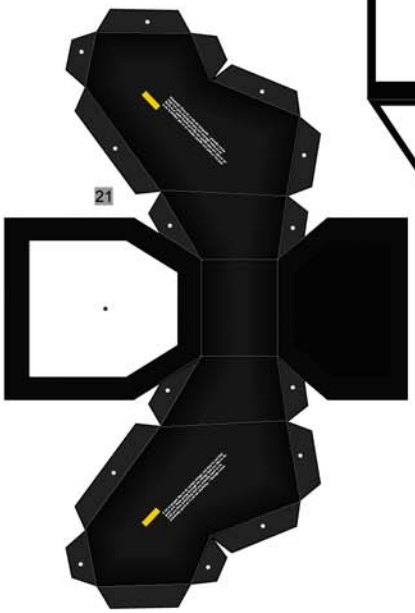
21

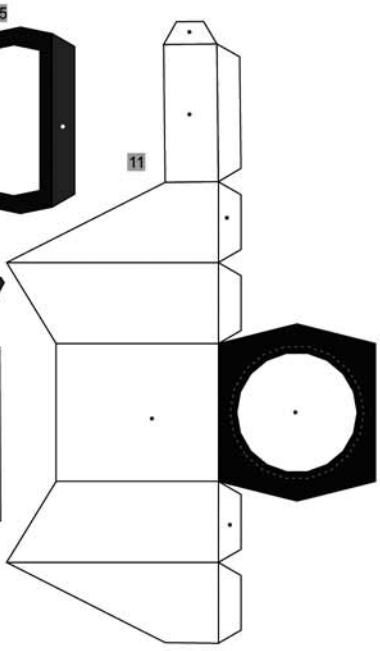
11

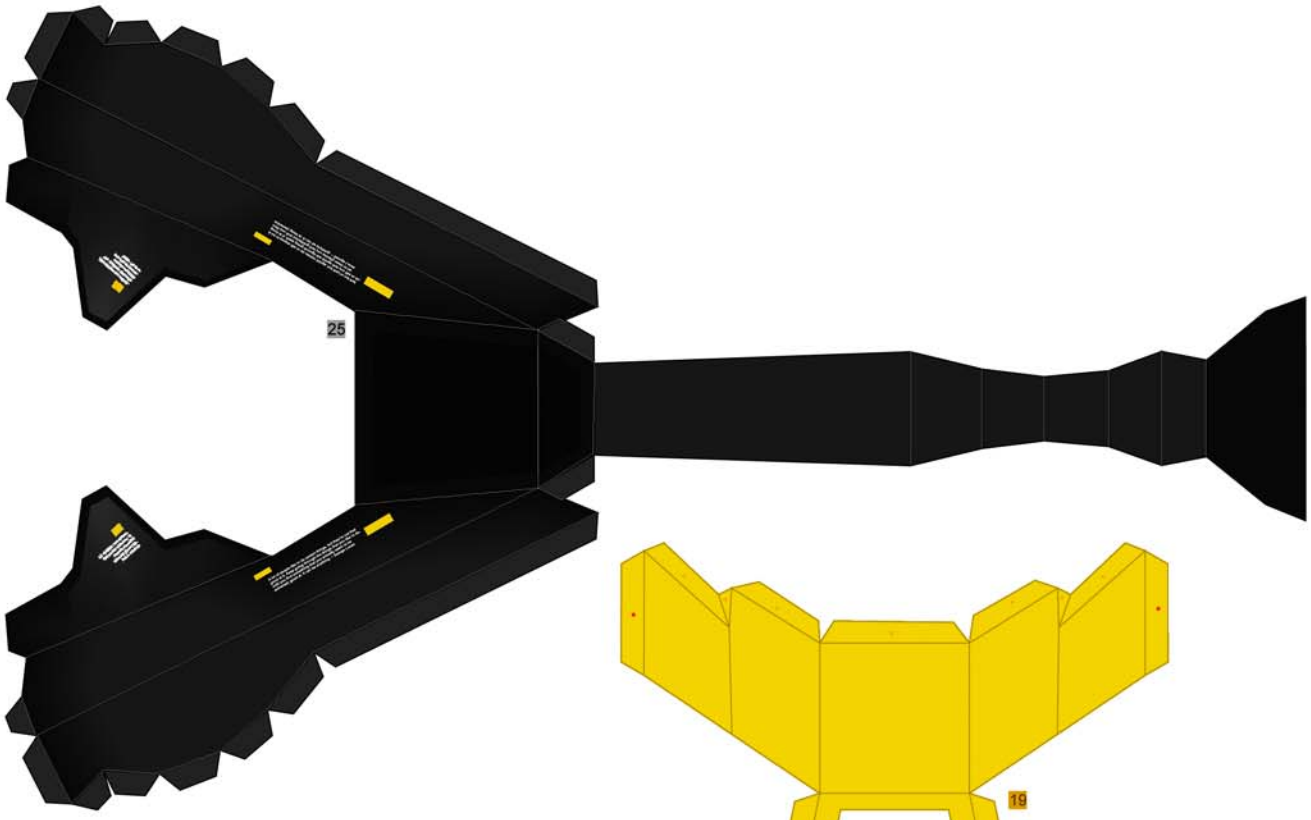
25

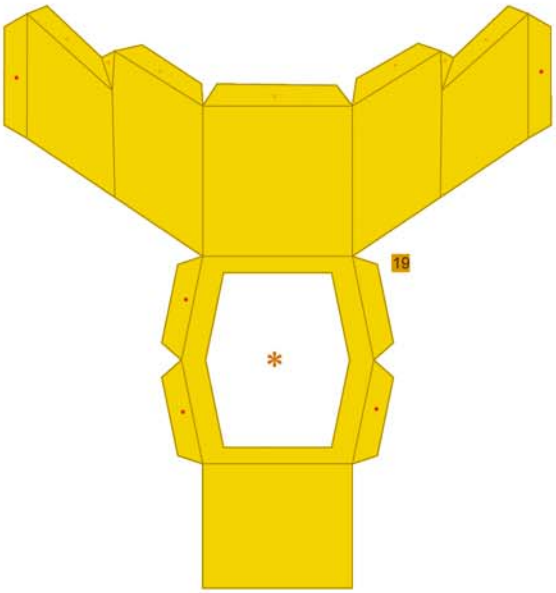
19

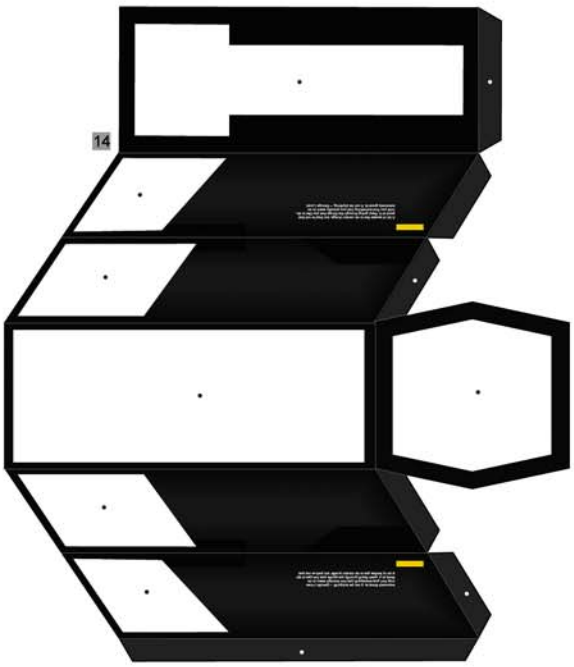
14

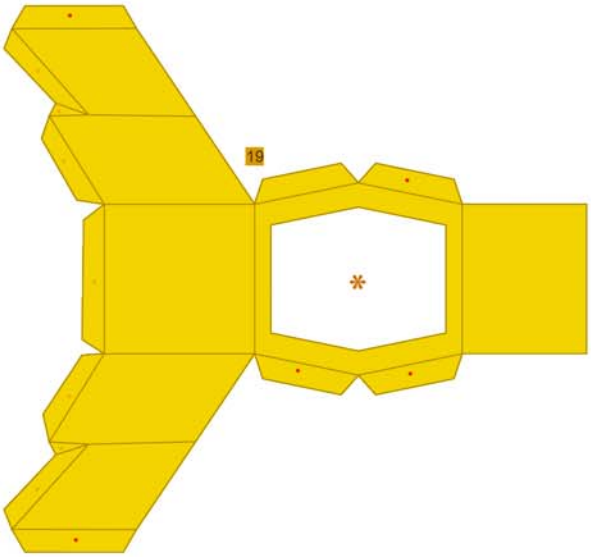
19